V36R

The Valla V36R pick and carry crane is a new generation electric mini crane operated by wireless remote control. This allows the operator to choose where to stand to control all operations, improving both the safety and productivity of any lift.

It has a maximum safe working load of 3.6t, a maximum working height of 7.1m (0.8t), and a maximum working radius of 4.8m (0.5t). As an electric battery crane, the Valla V36R also provides sustainable zero-emissions and fume-free lifting.

3,600kg Max Lifting Capacity

HIRD TRAINING

CPCS - A66 Compact Crane (B)

CPCS AN nocn JOB CARD

Technical Specifications

Max Lifting Capacity	**3600kg**
Max Working Height	**7.1m**
Max Working Radius	**4.8m**
Capacity @ Max Height	**800kg**
Capacity @ Max Radius	**500kg**
Power Source	**Batteries**
Height	**1560mm**
Length	**2465mm**
Width	**900mm**
Total Machine Weight	**3800kg**

Optional Accessories

- Non-marking tyres
- Hydraulic winch
- Fly jib

Fully remote controlled pick & carry crane

Wireless remote control operation is one of many new features on this new generation of crane.

Dimensions

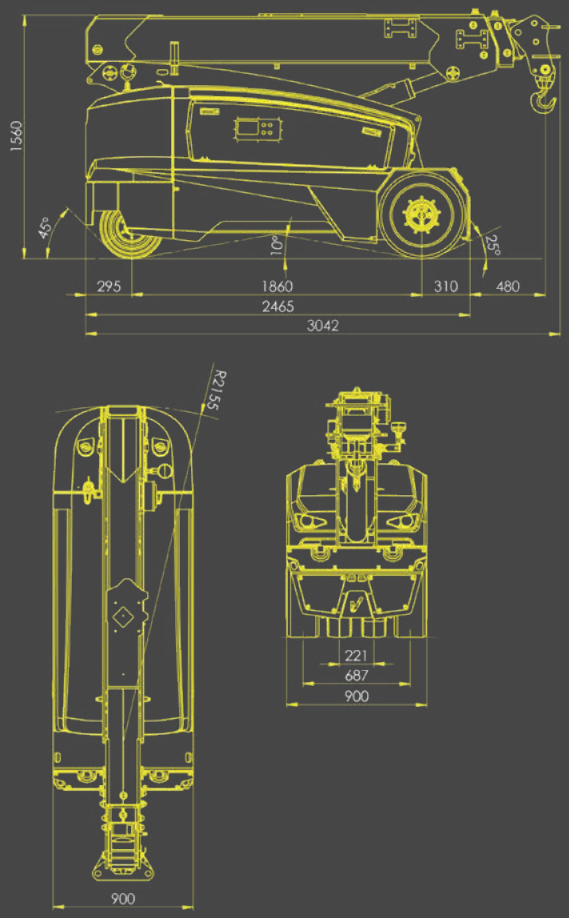

Working envelope

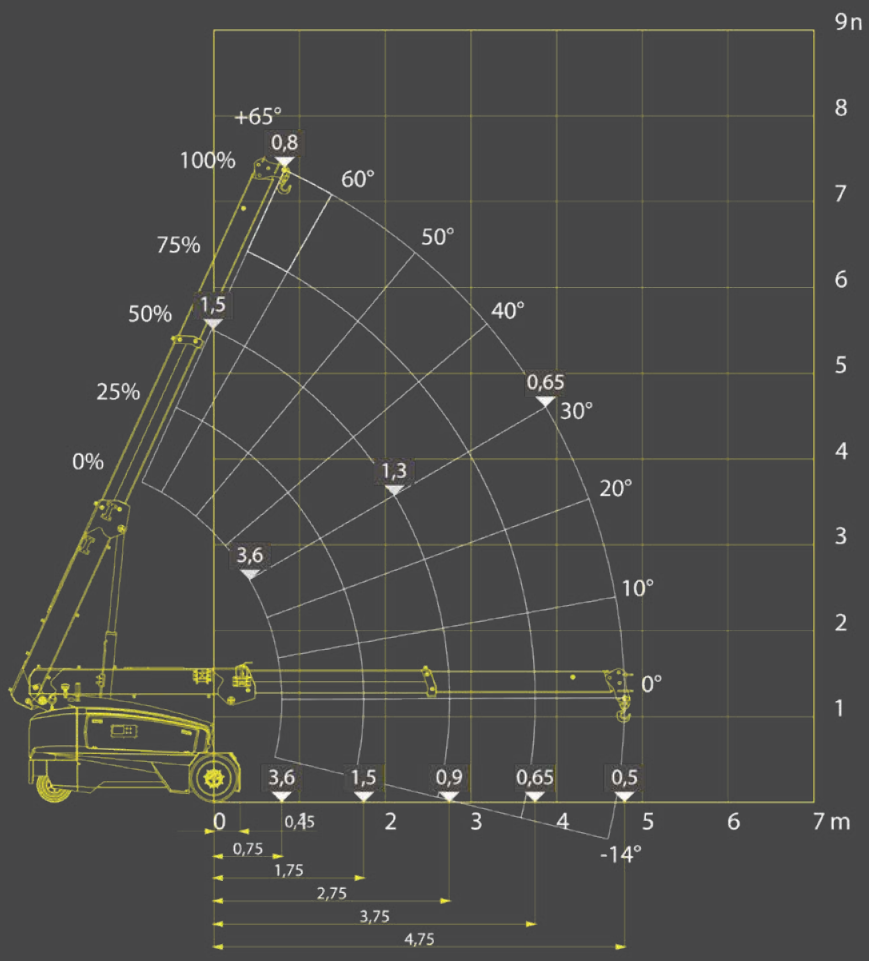

info@valla-cranes.co.uk